Junior Year, Advanced Engineering Design and Presentation (two hour block) - Students will broaden their engineering education with curriculum involving tunnel engineering, dam structural engineering, materials engineering (wood, concrete, and steel), dome structures, geotechnical engineering (soil and rock mechanics), and getting prepared for college with engineering career opportunities. Students in this course will expand their knowledge in surveying, technical drawing with 3D AutoCAD and REVIT. Students are selected to participate in the Texas Society of Professional Engineers "Engineer for a Day" program. Job shadowing opportunities are presented to those students interested in working and observing engineers at work.

Senior Year, Practicum in S.T.E.M. (two hour block) - This course is a capstone course designed for students who have completed most of the construction fields of civil and structural engineering to advance into a coherent study of engineering principles that are involved in all engineering studies. Students will be introduced to engineering physics in buoyancy, fluid mechanics, and heat transfer. Mechanical engineering principles with gears, lubrication, fuels and distillation, and engine design will be taught. Students will be introduced to the concepts of reverse engineering, engineering economics, aeronautical engineering concepts, workplace conduct and ethics, interviewing skills, and advanced technical drawing techniques. Internships with local companies are available on a part time basis and can occur during the school day if a student has the ability and desire to pursue.

Math Requirements - Most engineering programs require students to take advanced mathematics. The Academy is no exception. Students applying for the engineering program at the Academy should know that Algebra, Geometry, and Calculus are required and necessary to ensure success in the program. Students interested should begin preparing for advanced placement in math.

ENRICHMENT OPPORTUNITIES

The Academy wants students to see and experience the world of construction. Field trip opportunities are abundant and appropriate to the chosen strand. In addition to job site visits, students also have the opportunity to go on college visits with peers in other strands.

Construction Careers Academy has a very active business partnership base. Job shadowing is arranged where students can visit a company and shadow a professional in their strand. The Academy has successfully placed students in paid internships over the summer and during the school year. Job assistance is also available to CCA alumni.

(Source: BLS Engineering)

Northside
Independent School District

The mission of CCA is to provide an advanced and rigorous curriculum with a focus on construction technology, construction management, architectural design, applied engineering and real-world experience that will prepare students for studies in higher education and/or a career in a construction-related industry.

EST. 2009
CONSTRUCTION CAREERS ACADEMY

CONSTRUCTION CAREERS ACADEMY
AT WARREN HIGH SCHOOL

9411 Military Drive West
San Antonio, TX 78251
210-397-4294
cca@nisd.net
www.nisd.net/cca

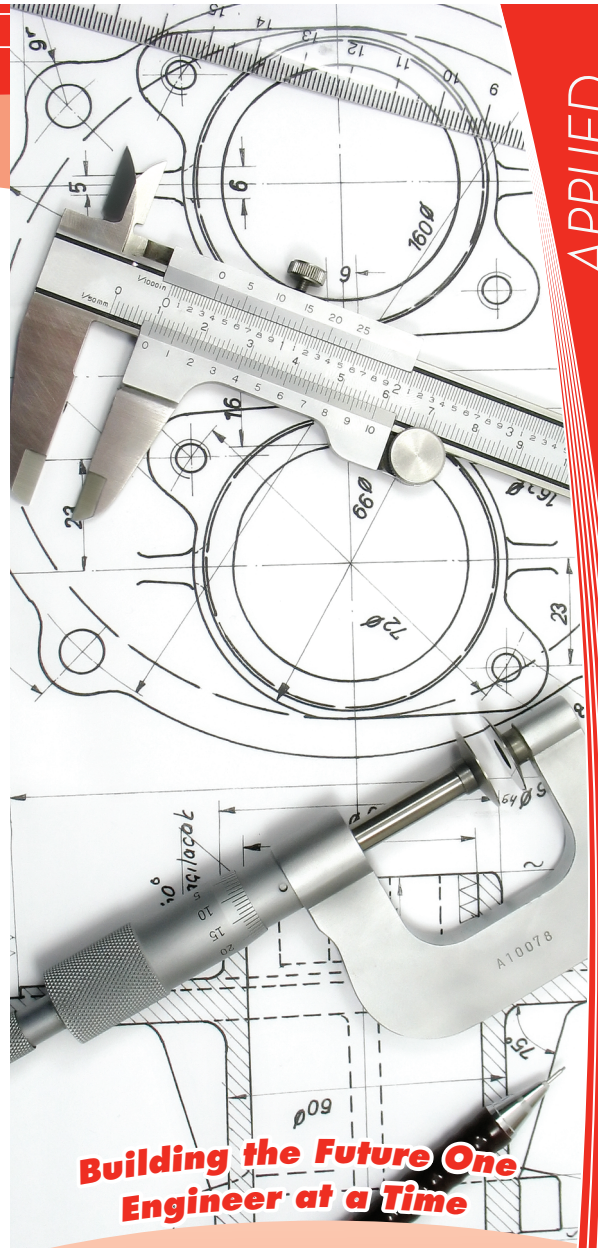

APPLIED ENGINEERING PROGRAM

Building the Future One Engineer at a Time

EST. 2009
CONSTRUCTION CAREERS ACADEMY

APPLIED ENGINEERING PROGRAM

IS THE APPLIED ENGINEERING PROGRAM THE RIGHT FIT?

Students interested in the Academy's Applied Engineering program have a strong desire to design and create utilizing critical thinking skills acquired in previous scholastic courses and life experiences. This program focuses on civil engineering, structural engineering, and technical drawing utilizing AutoCAD and REVIT, surveying, and engineering physics (buoyancy, fluid mechanics, and heat transfer). As a senior in the Academy, students get an introduction into mechanical and aeronautical engineering as well as engineering economics and ethics. Soft skills such as workplace behavior and interviewing techniques are taught at the end of the senior year. Students will learn through project-based learning and gain valuable skills needed to take a project from concept to completion. Students will design, build, and test projects using industry-recognized practices. Students will engage in real-world applications and collaborate with some of the industry's top engineers in the construction industry through job shadowing and internship opportunities.

Students in the engineering program can compete in various competitions offered by SKILLS USA such as engineering technology design, related technical math, technical drawing, and land surveying. The ACE Mentorship program is offered at the campus for industry mentors from various engineering disciplines to work with students on a construction project.

Upon completion of the Applied Engineering program, students will be prepared to enter the university of their choice. Students will be better prepared for what lies ahead of them in their quest to become an engineer.

EMPLOYMENT FORECAST FOR ENGINEERS

According to the Bureau of Labor Statistics (BLS), employment of engineers is projected to grow four percent from 2014 to 2024, adding about 65,000 new jobs. Among engineering specialties, several are projected to grow even faster than the four percent growth for engineers or the 6.5 percent growth for all occupations: biomedical engineers (23.1 percent), environmental engineers (12.4 percent), and civil engineers (8.4 percent).

Salary Range ($72,000 - $130,000): The median annual wage for engineers in 2015 was $90,060. The highest engineering strand median income was $130,000 for petroleum engineers.

Engineering Jobs: The field of engineering includes a broad spectrum of opportunities. There are a number of engineering jobs students can pursue, such as careers in construction engineering, structural engineering, materials engineering, and/or surveying. Students who graduate from the Academy will most likely pursue a career as a civil engineer.

CIVIL ENGINEERING

Civil engineers conceive, design, build, supervise, operate, construct, and maintain infrastructure projects and systems in the public and private sector, including roads, buildings, airports, tunnels, dams, bridges, and systems for water supply and sewage treatment. Many civil engineers work in planning, design, construction, research, and education.

Related Occupations:

Surveyors make precise measurements to determine property boundaries. They provide data relevant to the shape and contour of the Earth's surface for engineering, mapmaking, and construction projects and earn an annual salary of $59,390.

Environmental engineers use the principles of engineering, soil science, biology, and chemistry to develop solutions to environmental problems. They are involved in efforts to improve recycling, waste disposal, public health, and water and air pollution control and earn an annual salary of $84,890.

Urban and regional planners develop land use plans and programs that help create communities, accommodate population growth, and revitalize physical facilities in towns, cities, counties, and metropolitan areas and earn an annual salary of $70,020.

TIPS FOR SUCCESS IN THE APPLIED ENGINEERING PROGRAM

Students who enter the Academy's Applied Engineering program should begin preparing for the rigor of the program. Here are some tips that will help:

1) Develop good study habits.
2) Develop a system of organization. Good time management is of the essence.
3) The Academy's Engineering program is math intensive. Eighth graders entering the Academy should, at a minimum, take Algebra 1.
4) Look for opportunities to improve communication and presentation skills.
5) Utilize critical thinking skills in all science, math, and social skills courses.

COURSE SEQUENCE & DESCRIPTIONS FOR APPLIED ENGINEERING STRAND

The Academy's advanced and rigorous curriculum is guaranteed to challenge and prepare students for a successful career and university experience in engineering. The primary emphasis is in civil and construction engineering with a background in technical drawing and surveying. Students will also be introduced to engineering pre-requisites required in college to include heat transfer, buoyancy, and fluid mechanics. An introduction to the fields of mechanical and aeronautical engineering is taught in the senior year at the Academy. Students will be prepared to face the challenges of a collegiate level engineering program of their choice. All engineering students will adhere to the following ***Course Sequence:***

Freshman Year, Principles of Construction - All freshmen at CCA are required to take this course their first year in the Academy. Safety, hand tools, power tools, and reading technical drawings are introduced. Students will begin to develop an understanding of the educational requirements and career opportunities in this cluster. Students will leave this class prepared for their strand choice with a certification in OSHA 10-Hour Construction and in NCCER Core.

Sophomore Year, Engineering Design and Presentation (one hour block) - Students will discover how engineering developed through time and learn how basic engineering principles are still in use today. Students will begin to utilize their math and science skills to solve problems that involve utilizing critical engineering skills in the fields of civil and structural engineering. Static forces, bending moments, modulus of elasticity, static equilibrium, bridge engineering, structures engineering, railroads and highway construction and design. Basic surveying utilizing trigonometry will be taught. Students will also begin designing plans on AutoCAD. Students will be involved in design teams on several build projects that will test their knowledge of what they have learned in the classroom.